13.02 Producing sliding and fixed points via bulb-tite blind rivet

The fastening has to be confirmed in a static calculation. An analysis of the fastening of the FF2® or FF2 plus® panel utilizing bulb-tite blind rivets on the area of support yielded the following result:

The diameter of a rivet hole for a sliding point should continue to be limited to a diameter of ≤ 7.0 mm due to the proper configuration of the bulb-tites during riveting. Required shifting due to thermal expansion between the riveted FF2® /FF2 plus® and FF3® panels and the bearing profile of V ˜± 1.0 mm is possible at the permissible shearing stress of perm. S = 0.50 kN per rivet.

The permissible stresses of bulb-tite blind rivet types RV6604-6-4 and RV6604-6-6 are:

on shearing off: perm. S = 0.50 kN

to traction: perm. H = 0.34 kN

for edge intervals: a ≤ 40 mm

and b ≥ 10mm

to traction: perm. H = 0.50 kN

for edge intervals: a ≤ 25 mm

and b ≥ 25mm

edge intervals: a = FF2® /FF2 plus® and FF3® panel - constructional element 1
b = Support profile - constructional element 2

Important: The very least edge interval of the rivets from the plate edge of the FF2® -, FF2 plus® and FF3® panel ≤ 25 mm.

Note: Since the thickness for Novelis FF3® increases from 2.00 mm to 3.00 mm, the permissible stresses derived for the FF3® panels can also be used for proof for the FF3® panels. This does not alter the failure modes.

Blind rivets (Bulb-tite®)

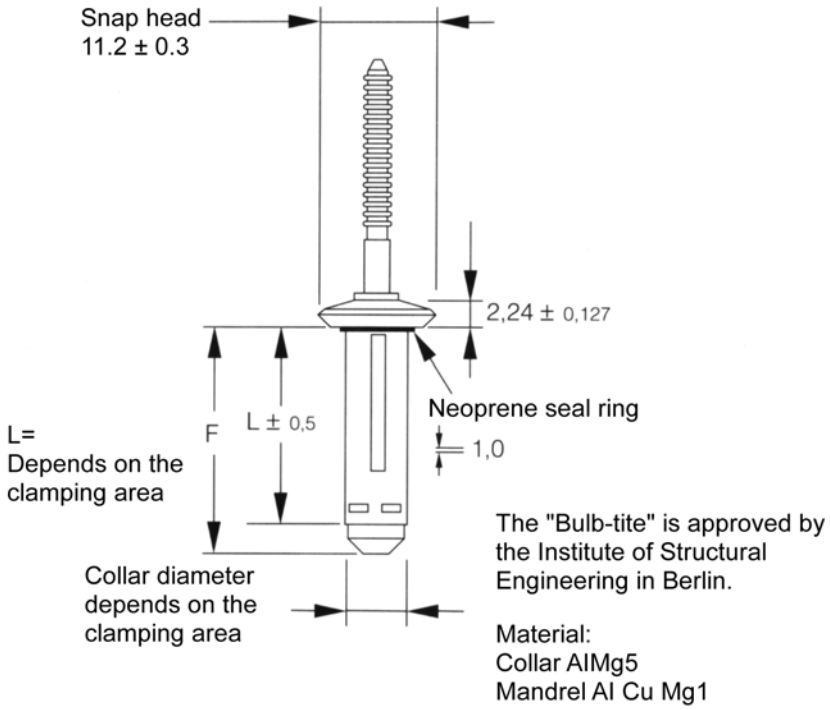

Clamping area	Order number	L	F max.
1,27- 4,75 mm	RV6604-6-3W	17,45	22,15
1,57- 6,35 mm	RV6604-6-4W	19,05	23,75
4,75- 9,50 mm	RV6604-6-6W	22,23	26,92
7,92-12,70 mm	RV6604-6-8W	25,40	30,10
11,10-15,88 mm	RV6604-6-10W	28,58	33,27
14,30-19,05 mm	RV6604-6-12W	31,75	36,45

Working procedure with the bulb-tite blind rivet

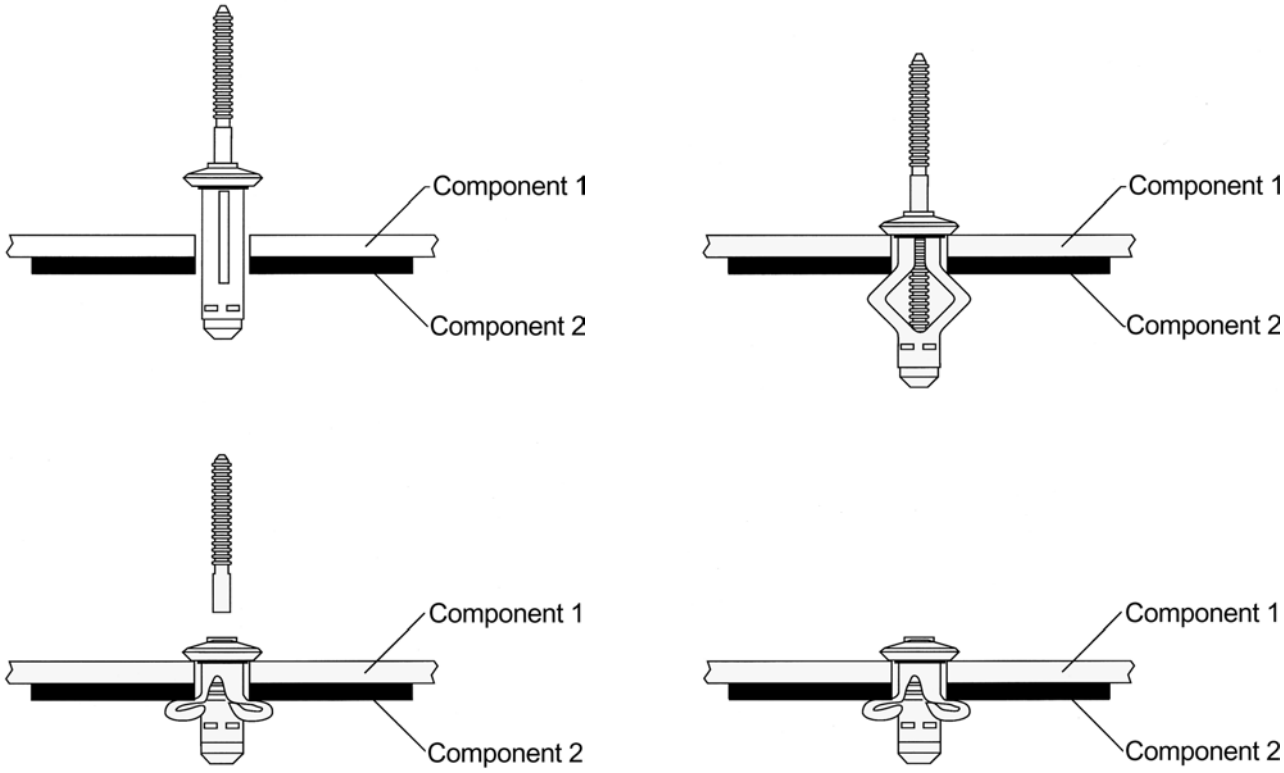

A special mouthpiece is required for the bulb-tite blind rivet.

Component 1 = FF2®
FF2 plus® /FF3®

Component 2 = Subconstruction

The rivet hole diameter for a fixed point should correspond to the diameter of the relevant type of bulb-tite blind rivet.

A characteristic of the bulb-tite blind rivet is that the rivet always moves into the centre of the drilled hole so that it also permits a thermal expansion of the constructional element 1 of 1 mm while producing a sliding pint.